Citroen Wiring Diagram

File Name: Reference Wiring Diagram
Last Changed: 11/04/2017

SPITRONICS™
ENGINE MANAGEMENT SYSTEMS
WWW.SPITRONICS.COM

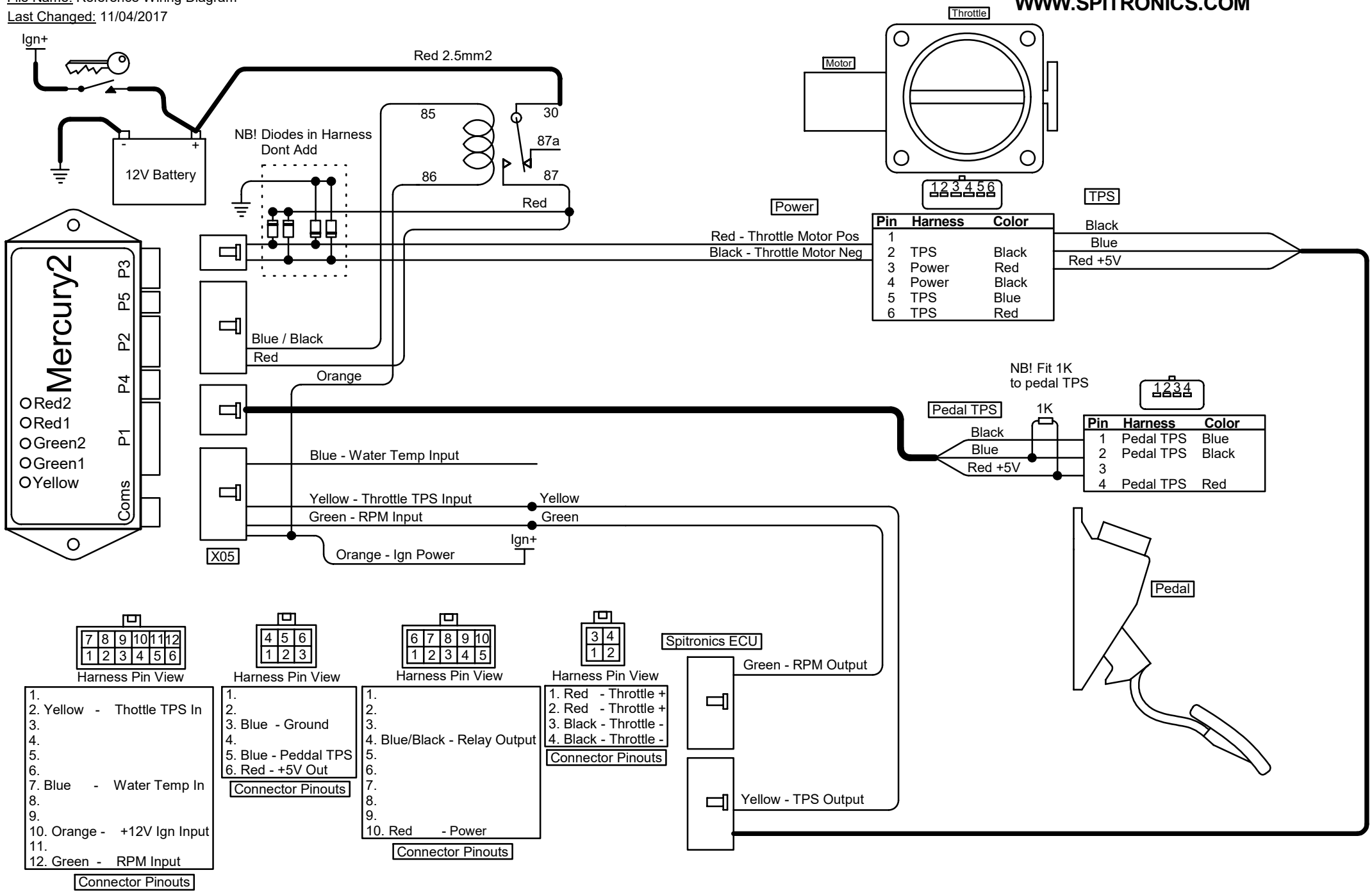

Pin	Harness	Color
1		
2	TPS	Black
3	Power	Red
4	Power	Black
5	TPS	Blue
6	TPS	Red

Pin	Harness	Color
1	Pedal TPS	Blue
2	Pedal TPS	Black
3		
4	Pedal TPS	Red

Connector Pinouts

1.
2. Yellow - Thottle TPS In
3.
4.
5.
6.
7. Blue - Water Temp In
8.
9.
10. Orange - +12V Ign Input
11.
12. Green - RPM Input

Connector Pinouts

1.
2.
3. Blue - Ground
4.
5. Blue - Peddal TPS
6. Red - +5V Out

Connector Pinouts

1.
2.
3.
4. Blue/Black - Relay Output
5.
6.
7.
8.
9.
10. Red - Power

Connector Pinouts

1. Red - Throttle +
2. Red - Throttle +
3. Black - Throttle -
4. Black - Throttle -

Connector Pinouts