P1 Inputs Drawing

Last Changed: 08/06/2021
File Name: E22 P1 Inputs Drawing

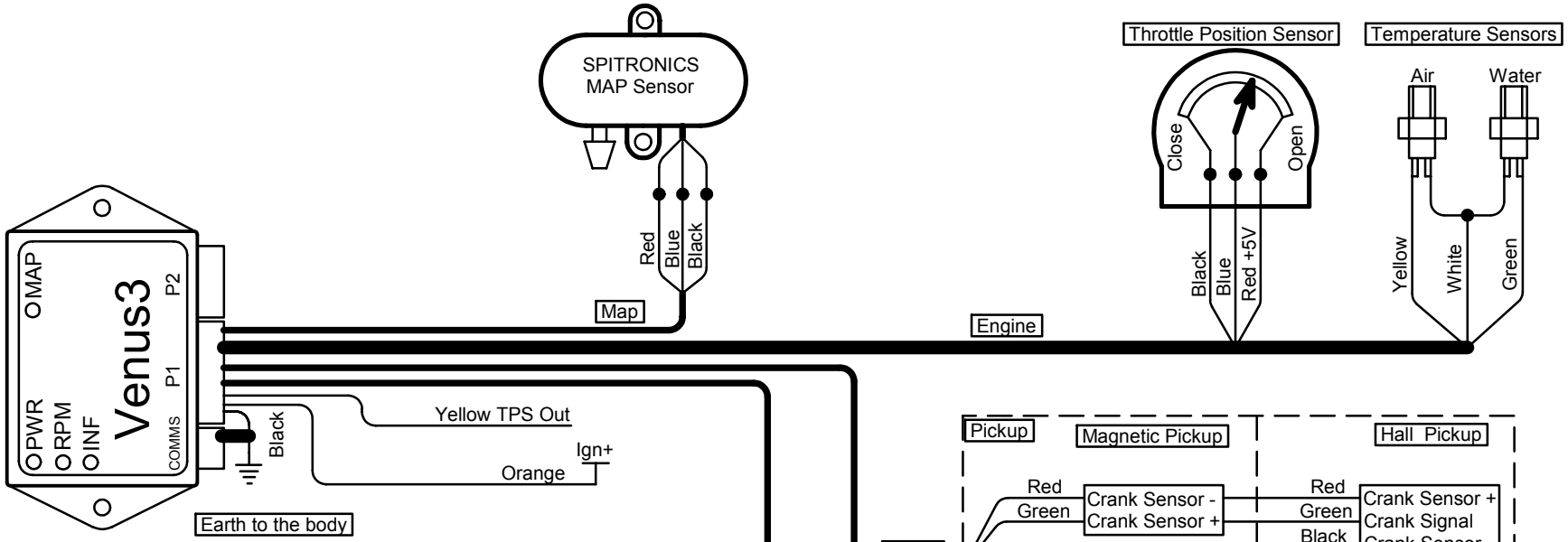

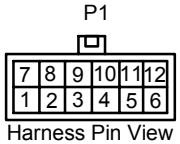

Harness Pin View

1. Yellow	-	Air Temp Sensor
2. Blue	-	TPS Sensor
3. Blue	-	Map Sensor
4. Black	-	Ground
5. Blue	-	Cam Sensor Power
6. Red	-	Crank Sensor Power
7. Green	-	Water Temp Sensor
8. Red	-	Lamda Sensor +
9. Red	-	+5V Output
10. Red	-	+12V Ign Input
11. Yellow	-	Cam Sensor Signal
12. Green	-	Crank Sensor Signal
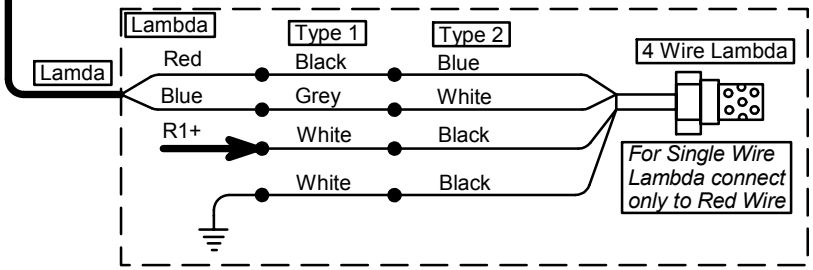
Connector Pinouts