M03 P3 Output Harness
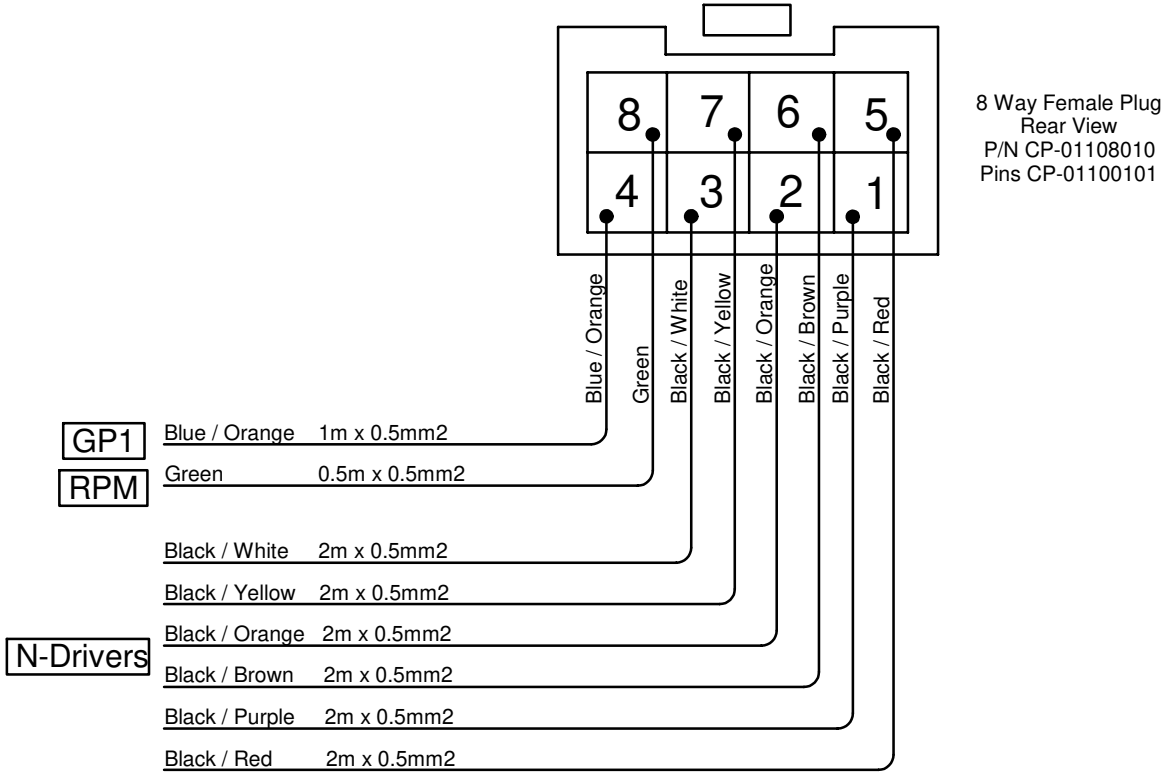
Last Changed: 15/03/2015