E71-P1 TCU Input Harness
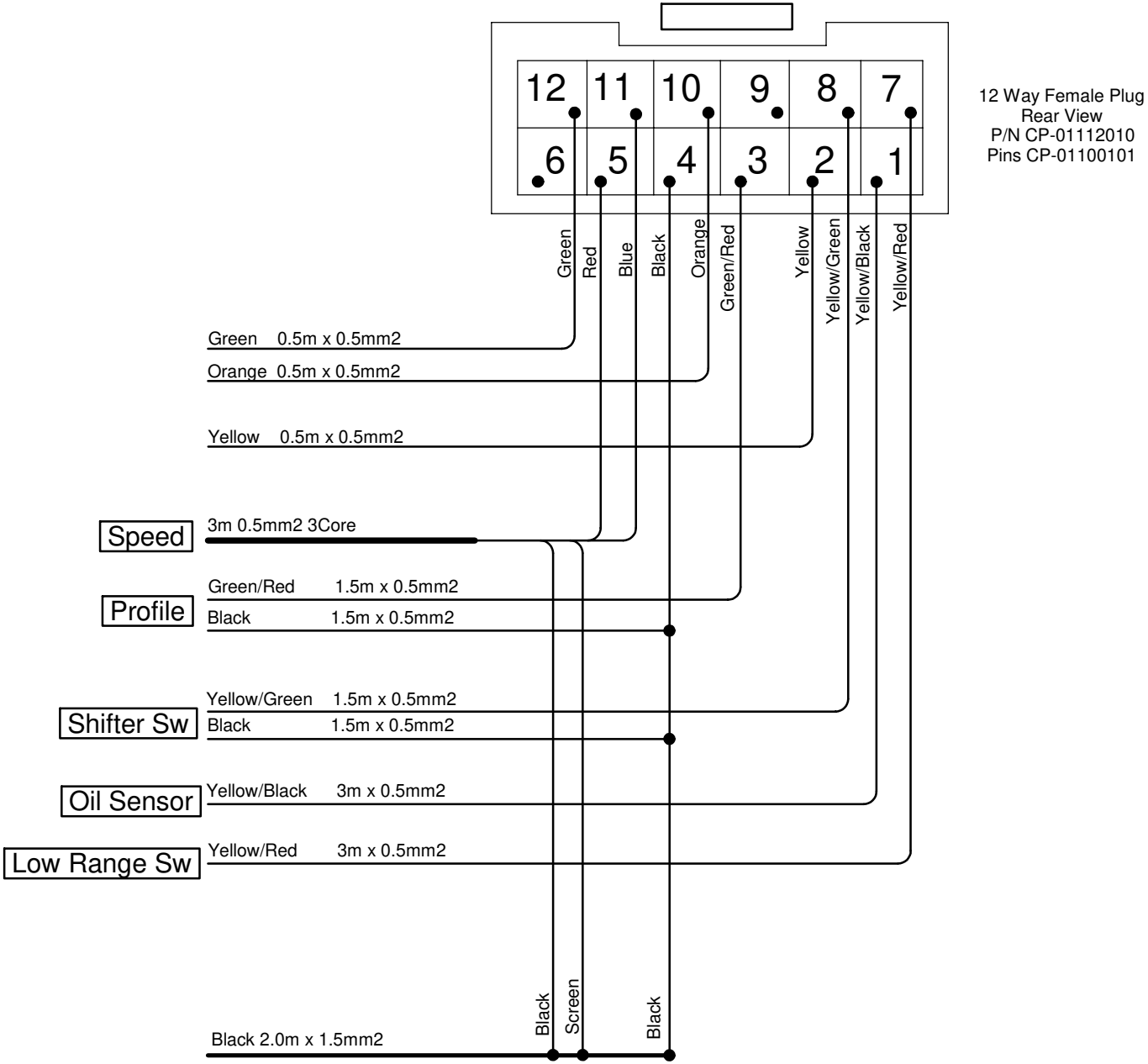
Last Changed: 23/06/2025