E63 P3 Output Harness Design
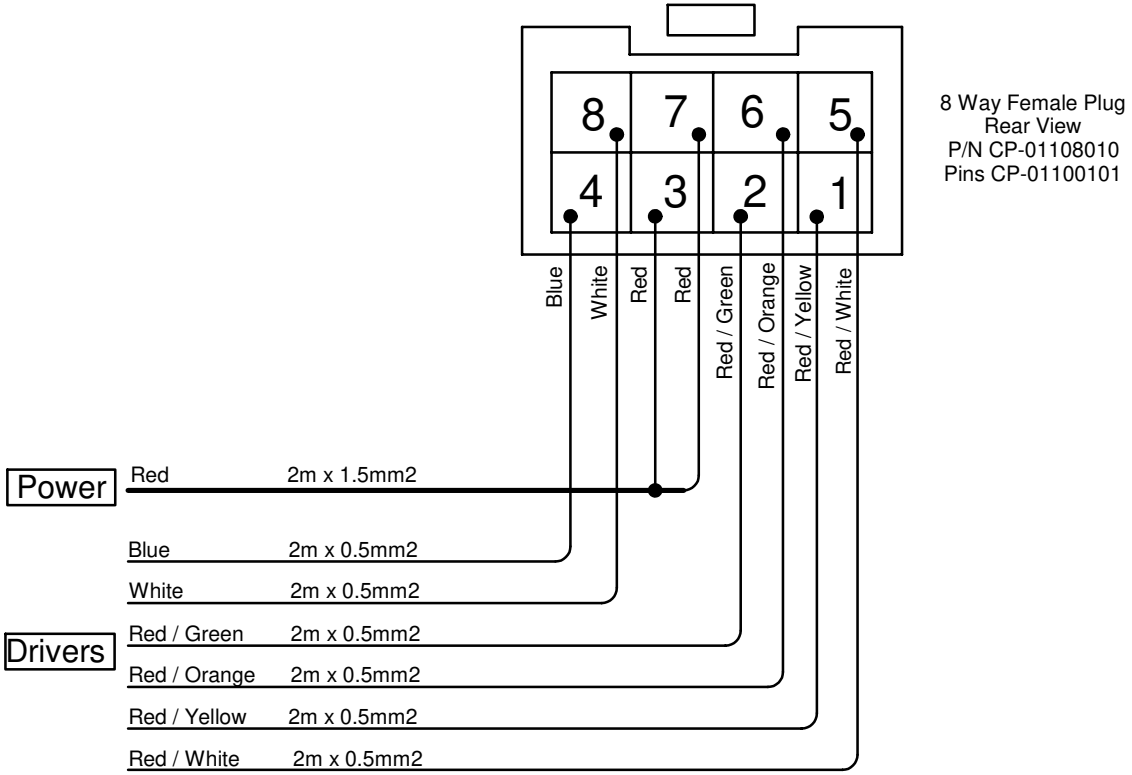
Last Changed: 06/06/2025