M74 P4 Input Harness Design

Last Changed: 18/11/2025

Products that can use this harness
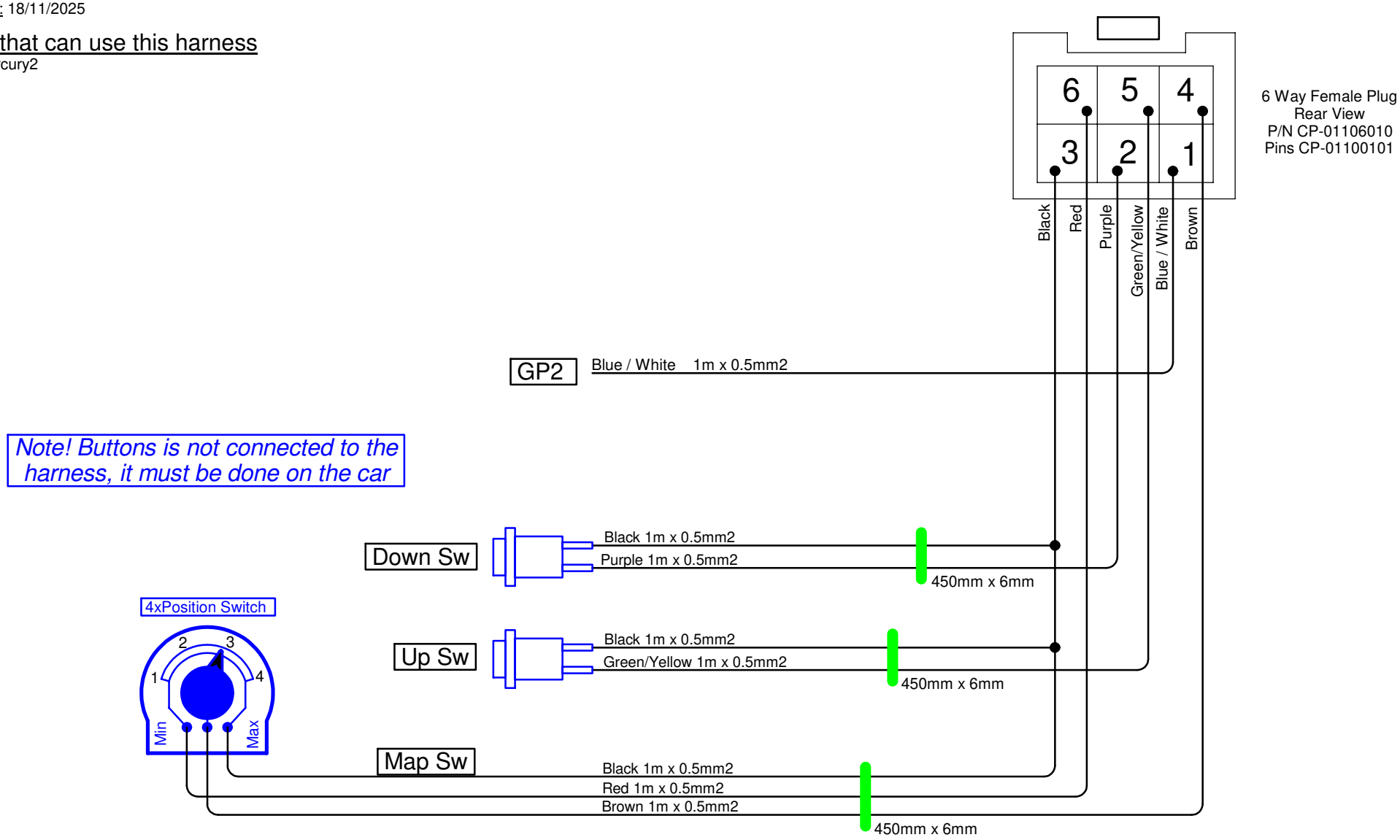
Mercury3, Mercury2