# P07  COMS Extension Harness
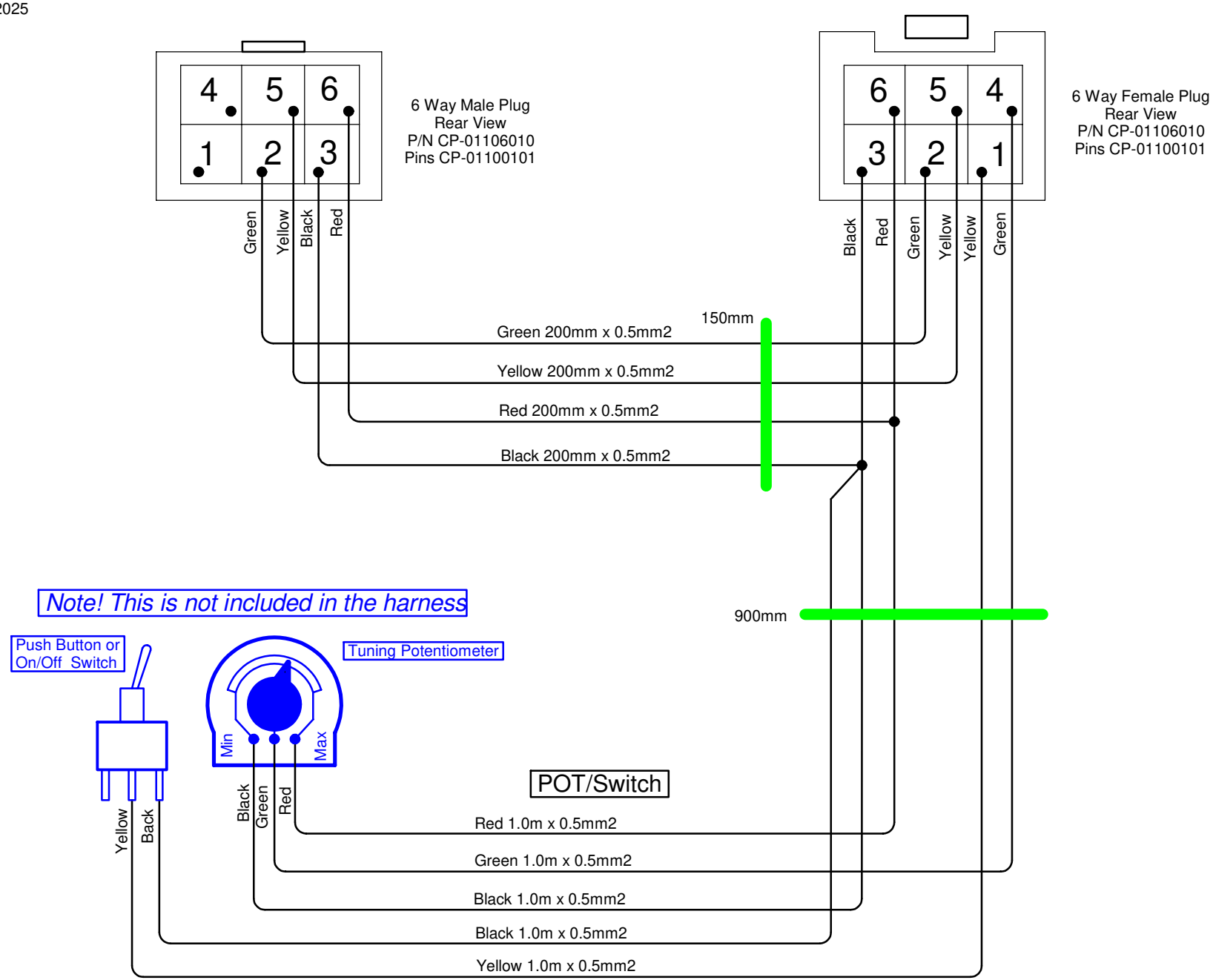
Last Changed: 02/08/2025