Z12 Output Harness

File Name: Z12 Harness

Last Changed: 27/10/2015

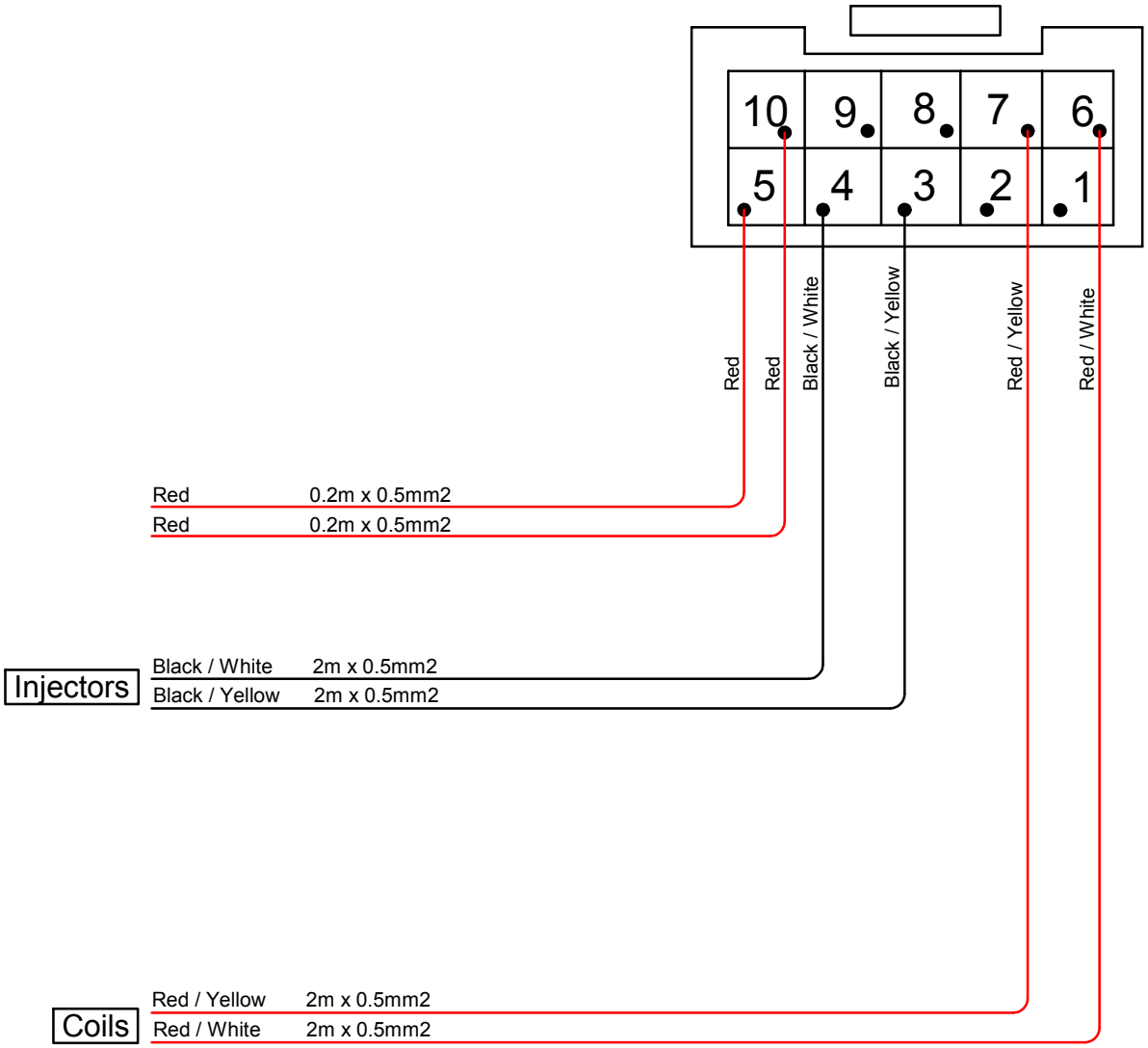

Screened cables are 0.5mm2