E36 Output Harness

File Name: E36 Harness
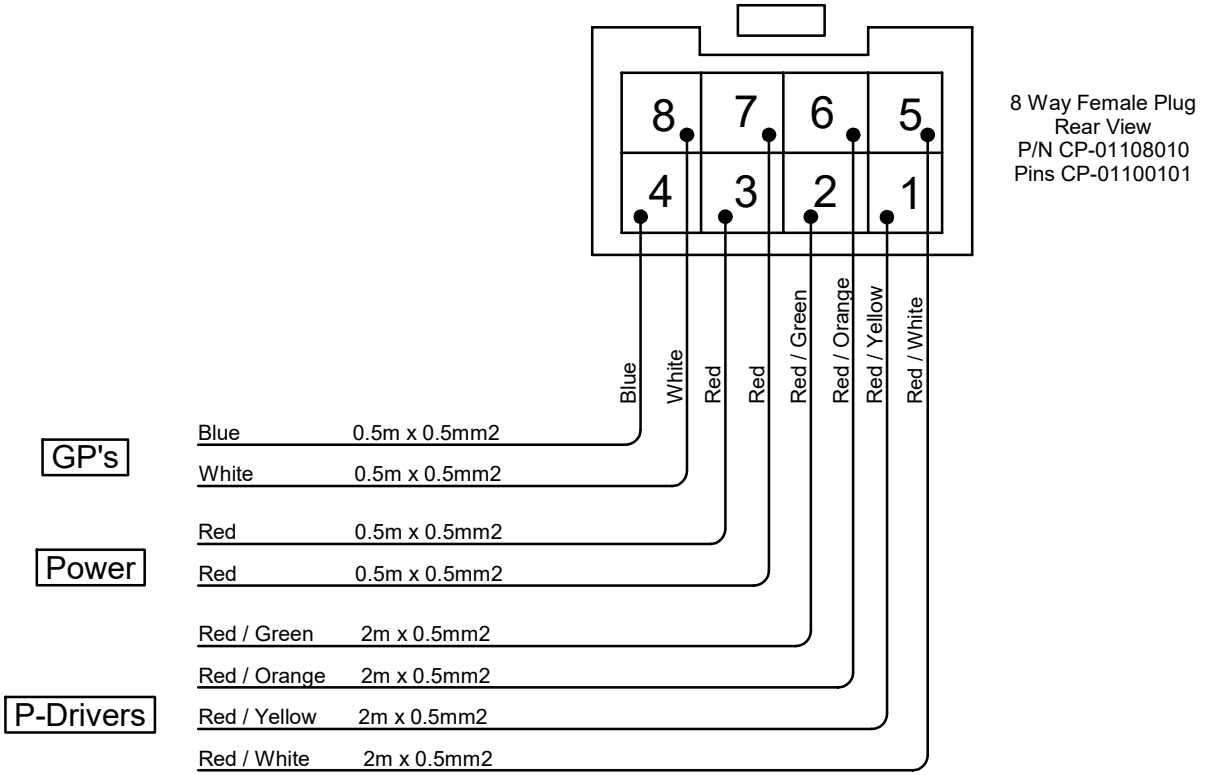
Last Changed: 17/09/2018