TITAN Wasted Spark Coil Wiring - No Drivers

Last Changed: 09/06/2011

Drawing Ver: 1.0

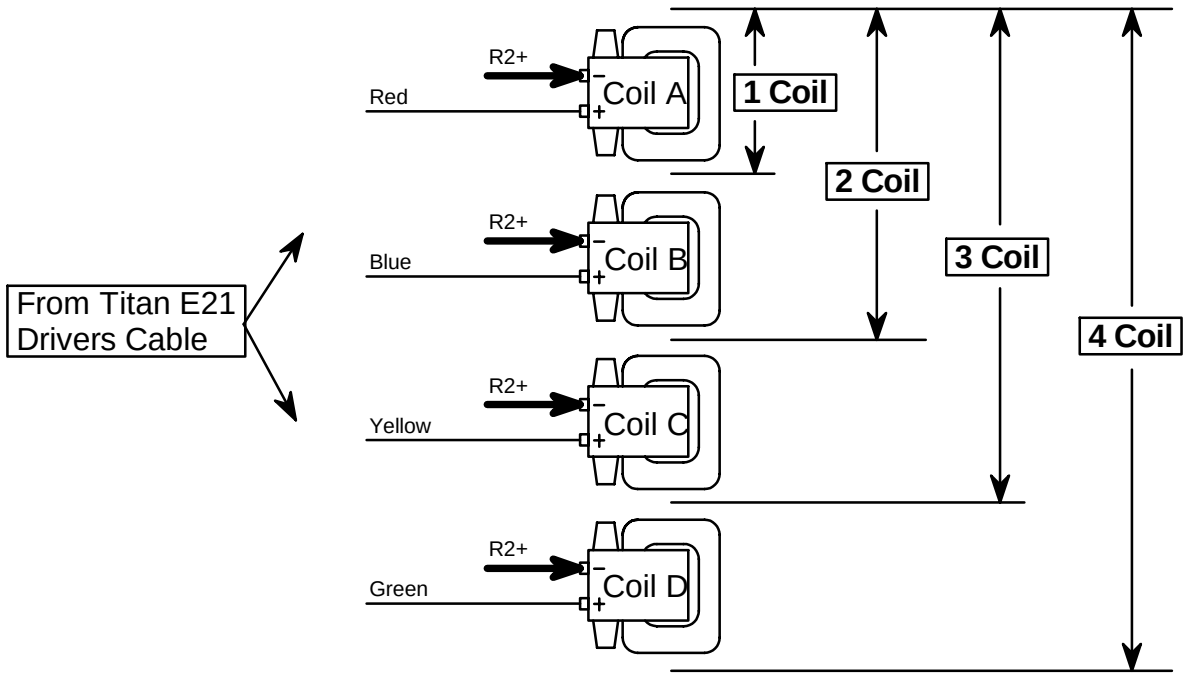

Firing Order
Example or Fill yours in

	A	B	C	D	A	B	C	D
4 Cyl	1	3			4	2		
4 Cyl	1	3			2	4		
6 Cyl	1	2	3		4	5	6	
6 Cyl	1	5	3		6	2	4	
8 Cyl	1	8	4	3	6	5	7	2