E22 Wiring Duel Magnetic

Last Changed: 16/11/2012

Drawing Ver: 1.0

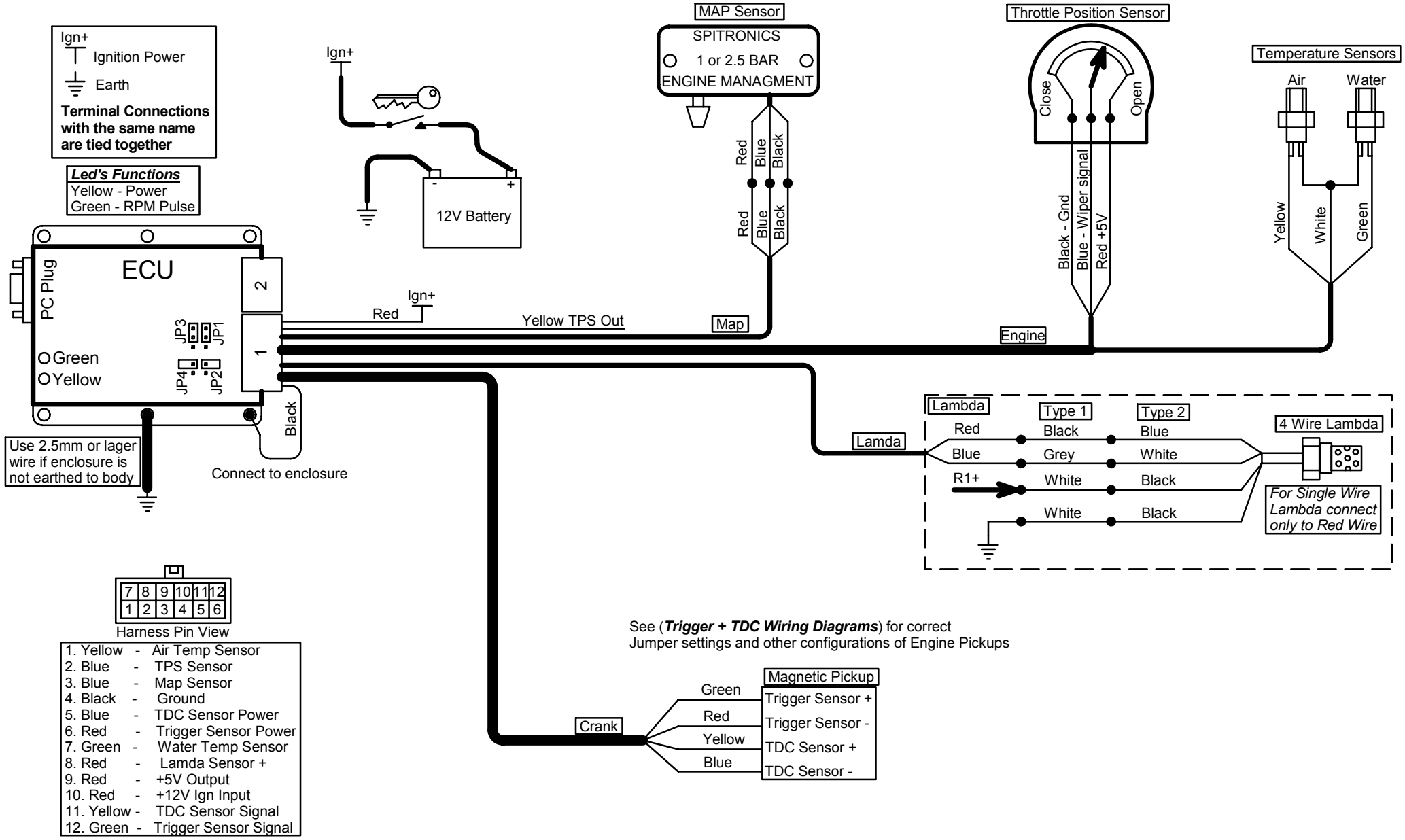

7	8	9	10	11	12
1	2	3	4	5	6

Harness Pin View

1. Yellow - Air Temp Sensor
2. Blue - TPS Sensor
3. Blue - Map Sensor
4. Black - Ground
5. Blue - TDC Sensor Power
6. Red - Trigger Sensor Power
7. Green - Water Temp Sensor
8. Red - Lamda Sensor +
9. Red - +5V Output
10. Red - +12V Ign Input
11. Yellow - TDC Sensor Signal
12. Green - Trigger Sensor Signal

See (***Trigger + TDC Wiring Diagrams***) for correct Jumper settings and other configurations of Engine Pickups